ROBOPAC RAMPS

OPTIONAL ADD ONN

EASY LOAD IN!

ROBOPAC RAMPS SPEC SHEET

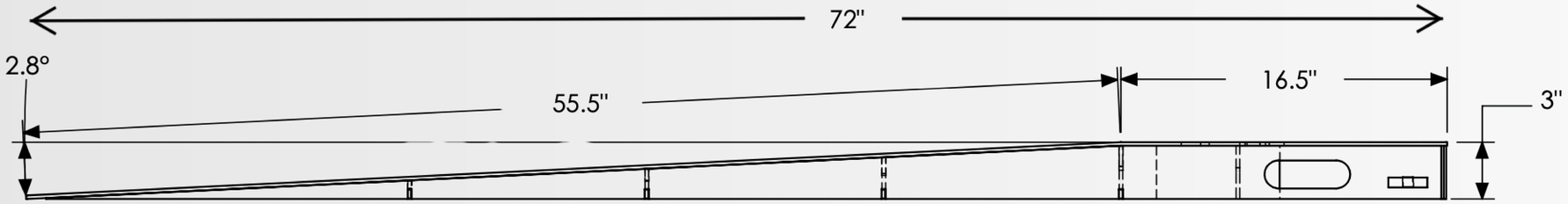

Ramp for 65" turntable
Part Number: 7014560006

Heavy duty 5,000 pound capacity ramp measures 72" L x 48" W x 3" H and its 16.5" porch allow easy loading of pallets using standard pallet jacks or electric pallet jacks. Ramp can adjust height with the feet included in the kit. Ramp can be secured to 65" machine base in 3 positions (front, left side, right side) and will not shift during use. The skid-free ramp surface provides high traction. It is compatible with the Scale package option for Ecoplat, Masterplat, Rotoplat, and Technoplat.

ROBOPACUSA.COM

INFO.US@ROBOPAC.COM

ROBOPAC RAMPS SPEC SHEET

24" ramp extension for 65" turntable
Part Number: 7014560007

Extends platform at the top of ramp to allow loading with powered walkies or dual walkies. This option must be selected when loading with powered walkies or dual walkies.

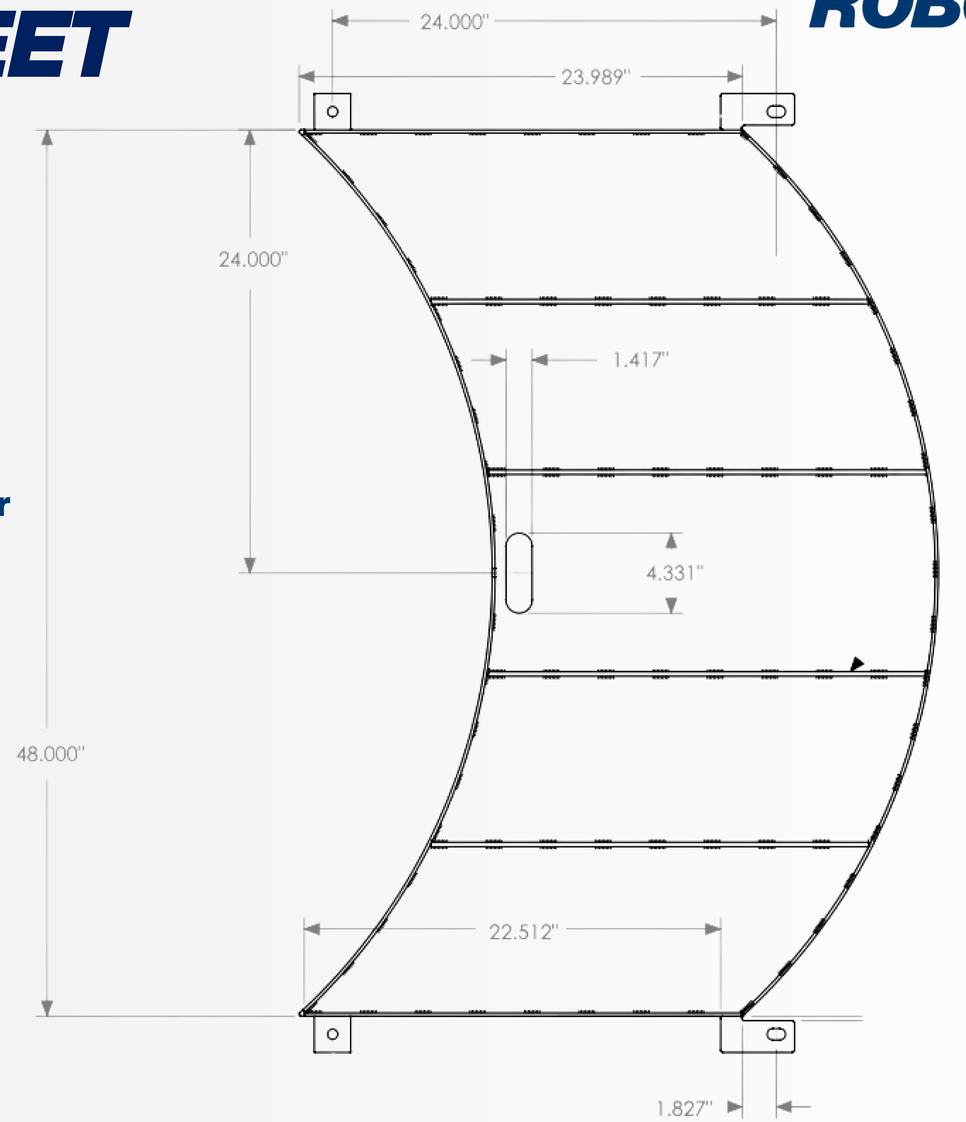

ROBOPACUSA.COM

INFO.US@ROBOPAC.COM

ROBOPAC RAMPS SPEC SHEET

Ramp Assembly

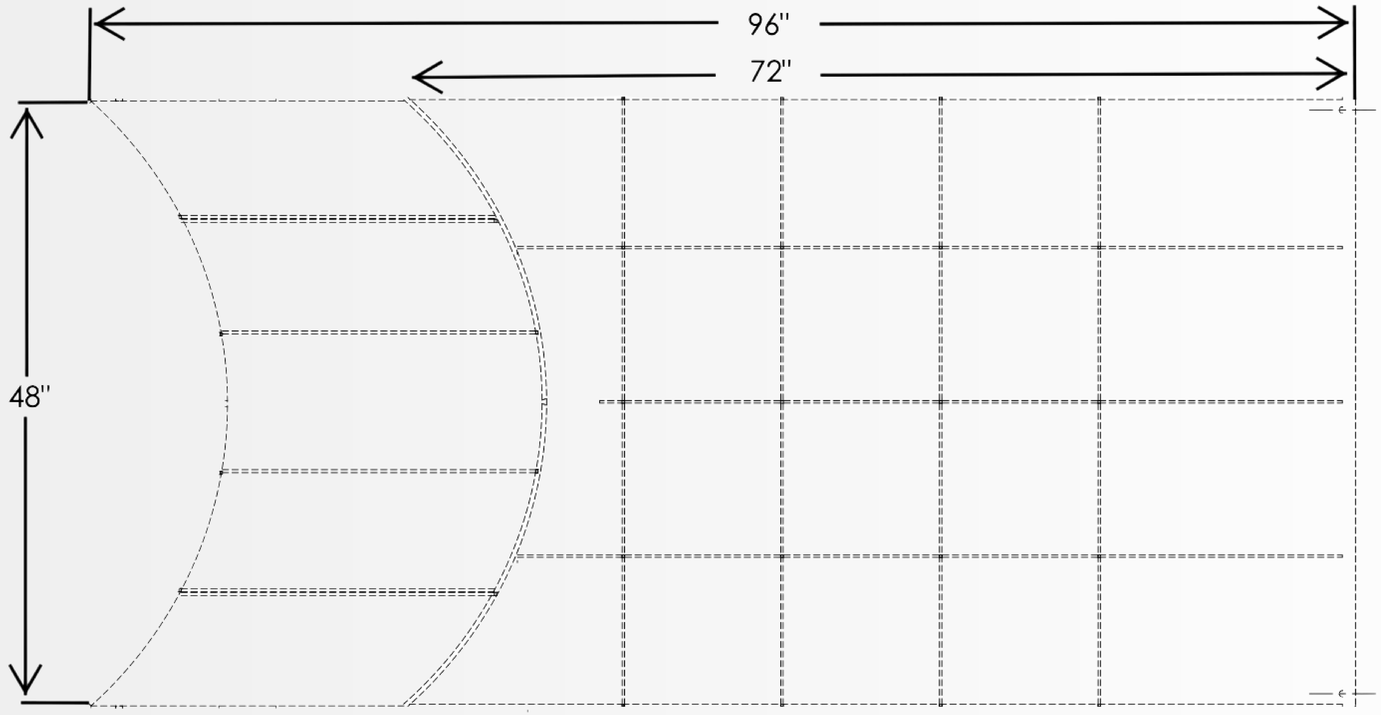

ROBOPACUSA.COM

INFO.US@ROBOPAC.COM