Semi-Automatic Stretch Wrapper

PLURIPAC M

BUBBLE WRAP, FOAM OR POLYETHYLENE REELS COLD PACKAGING DEVICE

The Pluripac M is a bubble wrap, foam or polyethylene reels cold packaging device that is compatible with new or already installed Compacta manual horizontal stretch wrapping machines.

- PRODUCT SHOCK PROTECTION
- TOTAL CLOSING OF THE PRODUCT

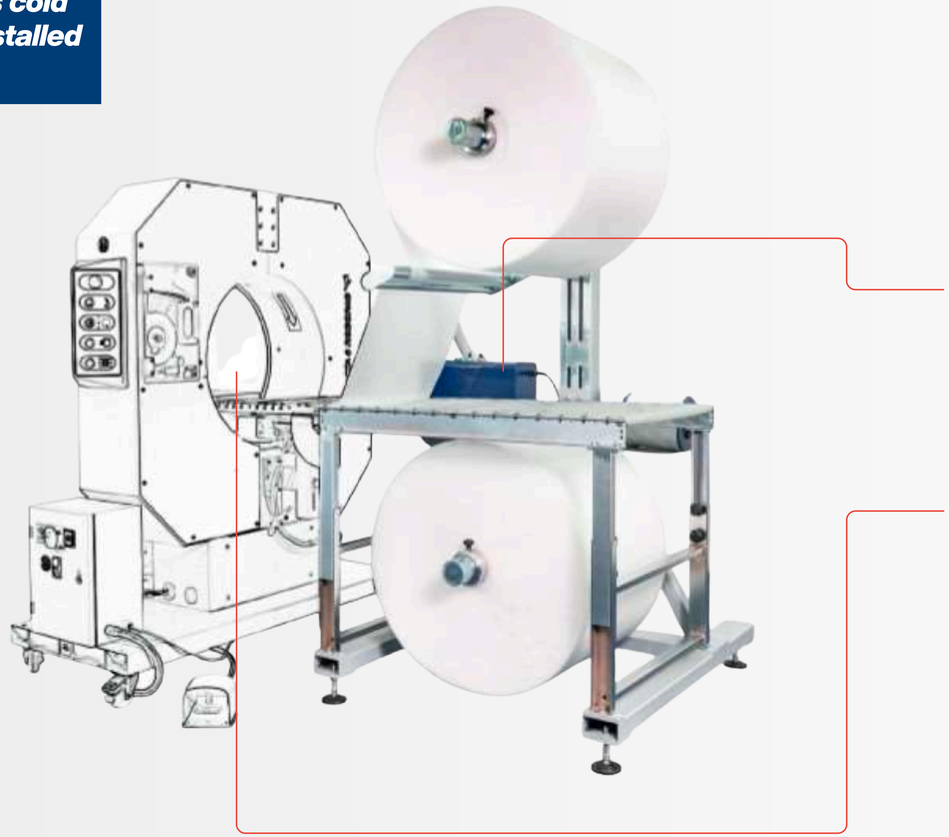

PERFORMANCE FEATURES:

MANUAL IMPULSE WELDING

Manual welding of the plastic film on the product and adjustment of the welding time. Fume extraction hood with filter.

PLURIPAC M SPEC SHEET

Load Capacity Dimensions:

- Pluripac M6:
- Length (a): Minimum 100 mm, no maximum limit
- Width (b): Minimum 0 mm, Maximum 600 mm
- Height (h): Minimum 0 mm, Maximum 600 mm
- Pluripac M9:
- Length (a): Minimum 100 mm, no maximum limit
- Width (b): Minimum 0 mm, Maximum 900 mm
- Height (h): Minimum 0 mm, Maximum 720 mm

Technical Features

Pluripac M6:

- Power supply voltage: 230 V, single-phase
- Power supply frequency: 50/60 Hz
- Installed power: 1 kW
- Current consumption: 8 A
- Maximum reel diameter: 700 mm
- Reel width: 600 mm
- Film type: Bubble wrap, polyethylene, polyolefins

Technical Features

Pluripac M9:

- Power supply voltage: 230 V, single-phase
- Power supply frequency: 50/60 Hz
- Installed power: 1 kW
- Current consumption: 8 A
- Maximum reel diameter: 700 mm
- Reel width: 900 mm
- Film type: Bubble wrap, polyethylene, polyolefins

ROBOPACUSA.COM

INFO.US@ROBOPAC.COM

PLURIPAC M SPEC SHEET

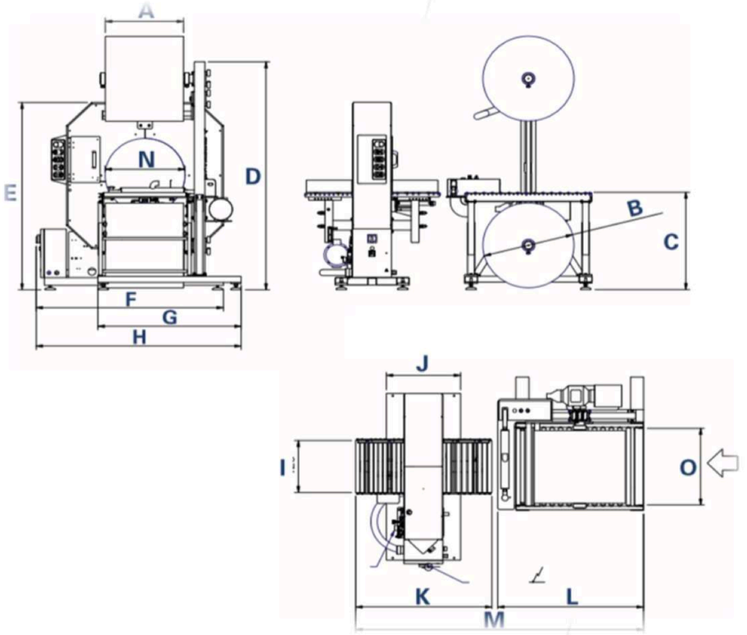

ROBOPACUSA.COM

INFO.US@ROBOPAC.COM

LAYOUT

Compacta 6 + Pluripac M6:

- A: 600 mm max
- B: 700 mm max
- C: 800 mm min / 900 mm max
- D: 1880 mm
- E: 1544 mm
- F: 1438 mm
- G: 1100 mm
- H: 1575 mm
- I: 428 mm
- J: 570 mm
- K: 1046 mm
- L: 1120 mm
- M: 2210 mm
- N: 614 mm
- O: 632 mm

LAYOUT

Compacta 9 + Pluripac M9:

- A: 900 mm max
- B: 700 mm max
- C: 800 mm min / 920 mm max
- D: 2030 mm
- E: 1850 mm
- F: 1948 mm
- G: 1400 mm
- H: 2030 mm
- I: 640 mm
- J: 975 mm
- K: 1450 mm
- L: 1120 mm
- M: 2600 mm
- N: 950 mm
- O: 830 mm